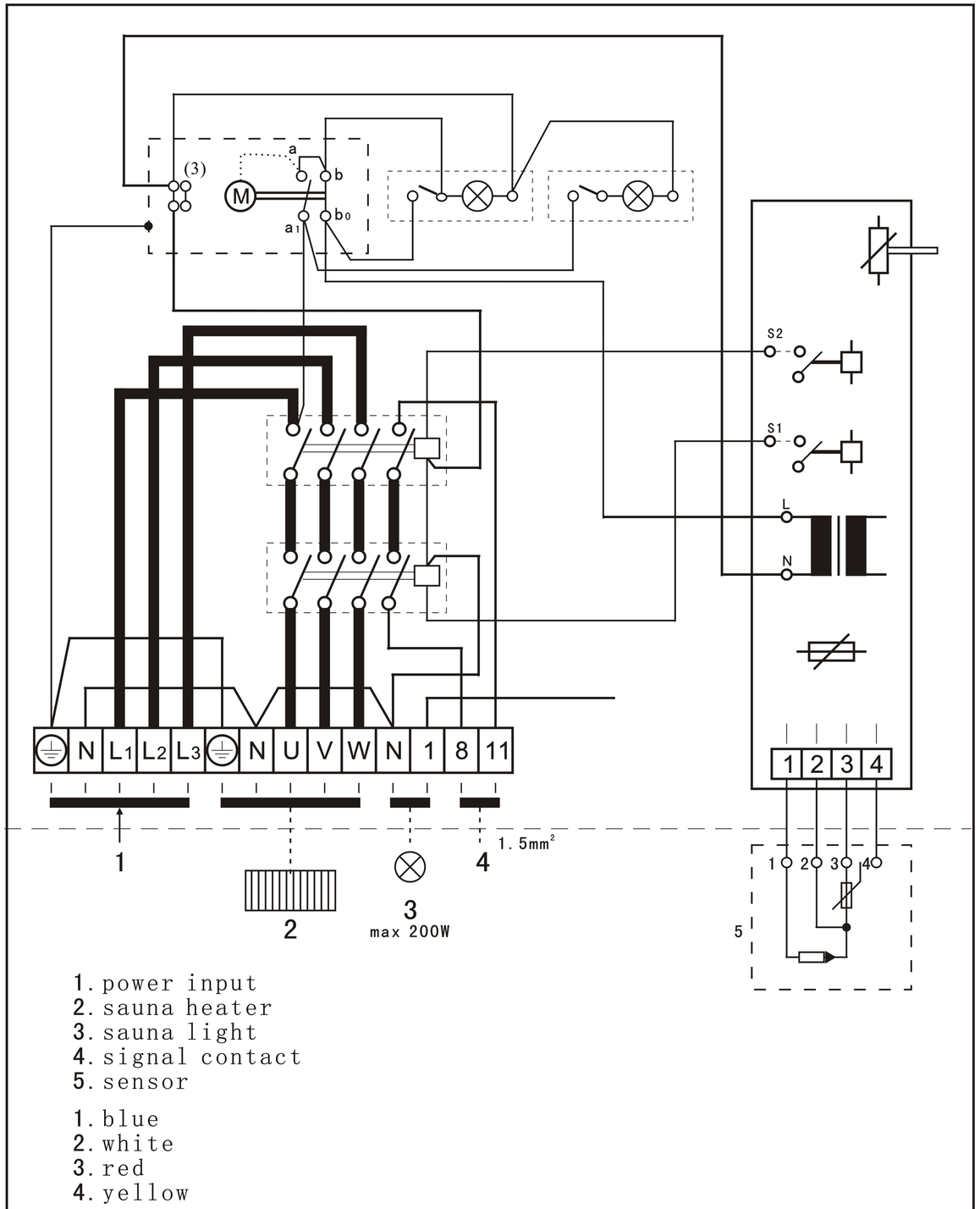

1. power input
2. sauna heater
3. sauna light
4. signal contact
5. sensor

1. blue
2. white
3. red
4. yellow

354 SYOK 17 C

SAV SAUNA HEATER

INSTALLATION MANUAL

MODEL SAV

WARNNING:PLEASE READ THIS MANUAL CAREFULLY BEFORE USE

SENSOR UNIT:

The sensor unit should be Plased in accordance with the measures stipulated in fig .1.The sensor unit is provided with long heat resisting (T170C) 4 × 0.5㎜ cable .these cables can be extended by a normal weak current cables .For connection of the sensor unitcontrol Panel,please see fig.4.

CONNECTION:

The electrical installation of the sauna heater and the control panel must be made by a qualified electrician according to the requirements. The principal connection will be the control panel. The heater can be connected by using a rupper wire HO7BB-F5G, table 1. The connection box must be must be a splash water proof construction and its height from the floor must not be higher than 50cm. If the connection-and install ation wires come inside the sauna or inside the walls of the sauna higher than 100cm from the floor they must loaded take at least 170℃ (for instance HO7SS-K4G).

All electrical appliancesthat are installed for use in 125℃ surrounding temperatures(marking T 125).

SAUNA ATONES:

Since the sauna stones may be dusty, we recommend that they are rinsed before being placed in the rock compartement. Put the largest stones at the bottom. Do not pack the stones tight but place them to allow good air circulation. To prevent damage to the sauna unit, the stones must be replaced if they begin to flake.

THE VENTILATION OF THE SAUNA:

The ventilation of the sauna must be sufficient. In a private sauna the air should be changed 6 times an hour.This can be achieved by a vent under the heater from an adjacent area.The diameter of the vent should be at least 6cm (fig.2). the exhaust must be situated lower than the upper benches as far as possible from the heater and about 50-60cm higher than the fresh air vent. The exhaust must be twice the size of the fresh air vent. From the exaust the consumed air will be lead upwards to the ventilation opening, which must be at the level of the ceiling. In order to facilitate the ventilation of the sauna after the bathing there must be a ventilator at the ventilation opening. This ventilator must be shut during the heating of the sauna and during the bathing. The exhaust pipe can also in order to save place be placed in a corner under the wood framing.

Power KW	Have fever the tube		
	SEPC12 1500W	SEPC11 2000W	SEPC10 2500W
10.5	1,2,3	4,5,6	
12.0		1,2,3,4,5,6	
15.0			1,2,3,4,5,6

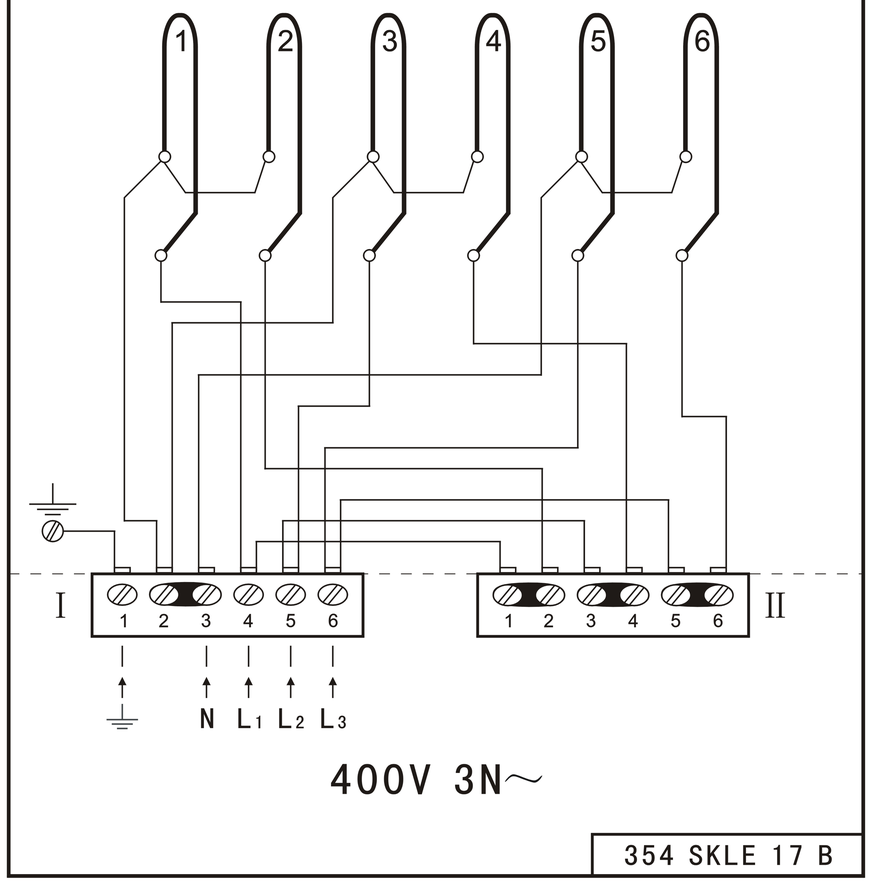

Kiuas,Ugn Heater,Ofen KW		Kaapelit Kaablar Wire sixe Leitungen	Kiuas,ugn heater,ofen KW		Kaapelit Kaablar Wire sixe Leitungen
3	10A	5×1.5	9	16A	5×2.5
4.5	10A	5×1.5	10.5	16A	5×2.5
6	10A	5×1.5	12	20A	5×4
8	10A	5×2.5	15	20A	5×6

Fig3

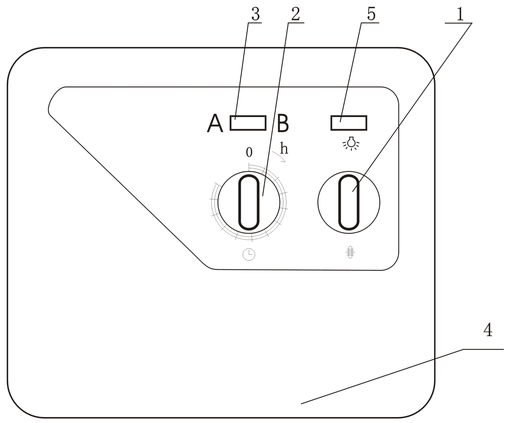

CONTROL PANEL

1.Thermostat 2.Timer 3.Pilot lamp connection

4.Sauna light 5.illuminate the switch

Fig4

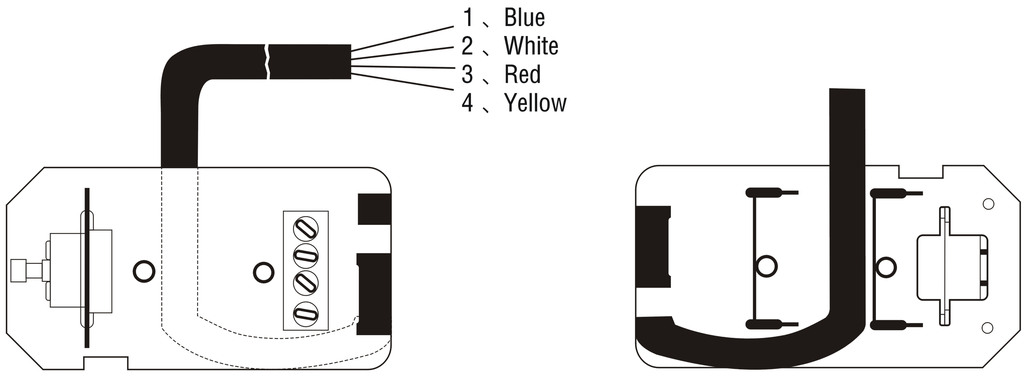

Front side Back side

LIMIT CONTROL:

Should the temperature in the sauna room of some reason reach too high the spare link in thesensor unit cuts off the power. When the temperature is back to normal the spare link has to be changed.

N.B. Before changing the spare link, please analyge the reason for the disturbance.

TIMER:

The timer is the main switch and it works for max. 3h.

When turning clockwise these is first a working area 1–3h, and then a presetting area 1–3h.

THE REGULATION OF THE TEMPERATURE:

Turn the knob of the thermostat to the desired temperature (fig.3) and switch on the heater by turning the timer switch to the desired position.The signal lamp on the control box indicates that the heater is on. After bathing switch off the heater by turning the timer switch to 0. If you forget to switch off the current, the timer will automatically take care of this. You need not turn the thermostat knob every time if you keep the sauna temperature constant. The sauna temperature can be steplessly adjusted.

USING:

Before you start to install and use the sauna heater check the following:

–that you have got all the parts needed.

–check that the voltage of the heater and the control box is the right one and that the control box suits your heater.

–chech that the effect of the heater suits your sauna. You must not exceed or go below the volumes mentioned in table 1.

–look at the installation distances in fig.1.You have to follow these,otherwise it can cause a burn.

–study these installation–and using instructions carefully.

HOW TO CHOOSE THE EFFECT OF THE HEATER:

Noticing the volume of the sauna you choose the effect of the heater according to table 1.

TABLE1.												
HEATER		SAUNA			MINIMUM DISTANCES			CABLES TO			FUSES	CONTROL PANEL
Type	Effect	Volume Min	Volume Man	Height Min	From heater to			Control Panel	Sensor unit	Heater	Main fuse	
	KW	m^3	m^3	Hmin cm	Side and backwall A min cm	Ceiling B min cm	Quard rail and upper bench C min cm	mm^2	mm^2	Ho7BB-F5G mm^2	A	COL3
SAV105	10.5	9	15	190	12	120	15	5×2.5	4×0.5	5×2.5	16	×
SAV120	12.0	10	18	210	16	140	20	5×4	4×0.5	5×4	20	×
SAV150	15.0	14	24	210	16	140	20	5×6	4×0.5	5×6	25	×

The volumes mentioned in table 1 are valid under the assumption that the sauna is well insulated. If there are walls of bricks or concrete in the sauna you have to add to the volume about 1.2m^2 for every brick-or concerete wall m^2 and then you choose the effect of the heater according to the composed volumes.

MOUNTING OF THE SAUNA HEATER:

The sauna heaters are freestanding models and these heaters must be firmly fastened to the floor by screwbolts through two of the feet. When fastening the heater to the floor please follow the requirements about the minimum distances to combustible material indicated on the name plate of the heater and in table 1 and fig. 1.the sauna heater can be placed on a wooden floor. Do not protect the wall behind the heater with for instance asbest- or eternite plates, as these may cause a too high temperature increase in the wall.

Do not place the sauna heater in a nisch, and you must not have a compact quard rail around the heater. Draught from door, vents etc. Should be avoided as this effects the thermostat.

QUARD RALL:

If you put a quard rail around the heater you hate to note the minimum distances mentioned in table 1.

MOUNTING OF THE CONTROL BOX:

The control box must be installed in a dry place outside the sauna roon. The sensor unit should be fastened to the wall in the sauna according to fig1.please follow the measurements mentioned in fig 1.otherwise it may cause a burn.

Fig1

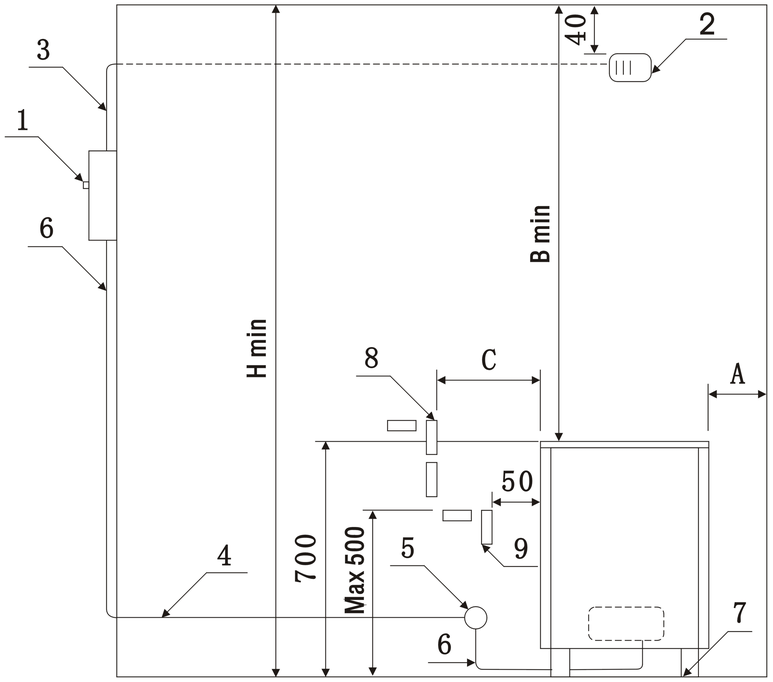

Measure A min,B min,C min and H min:table 1.

1.Timer knob in control panel 2.Sensor unit 3.Heat resisting cable 4.Feeder cable to heater
5.Junction box 6.connection cable to heater 7.Fastening hole ϕ 7mm
8.Upper bench or quard rail in frant or on the side of the heater.
9.Lower bench in front or on the side of the heater
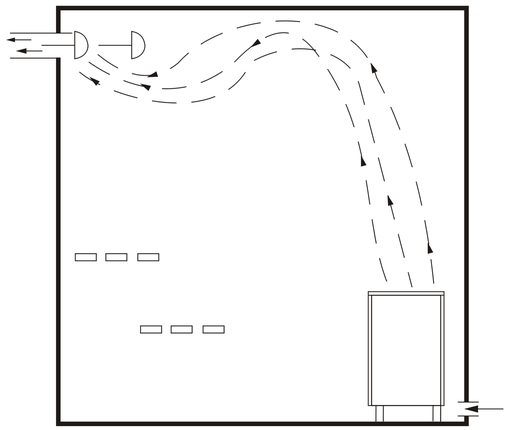
Fig2